1859302
Barrister Bookcase
Parts and Hardware List

A.	Swing Door	1 pc
B.	Side Panels	2 pcs
C.	Bottom Panel	1 pc
D.	Back Panel	1 pcs
E.	Front Stretcher	1 pc
F.	Back Stretcher	1 pc
G.	Connecting Bolts	8 pcs
H.	Eccentric Cams	8 pcs
I.	Allen Head Wrench	1 pc
J.	Door Pulls	2 pcs
K.	Phillips Pan Head Machine Screws	2 pcs
L.	Wood Dowels	4 pcs
M.	Connecting Plates	2 pcs
N.	Phillips Flat Head Wood Screws	4 pcs
O.	Phillips Head Screwdriver	1 pc

* Please make sure that you have all the parts and hardware indicated above before you begin assembly of this item.
* Use the hardware illustrations to determine the correct piece and size.
* This item should be assembled on a soft surface to prevent scratching of the finish during assembly.
* This item may require periodic tightening.

1859302
Barrister Bookcase

Hardware Illustrations

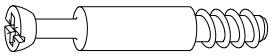

G. Connecting Bolt

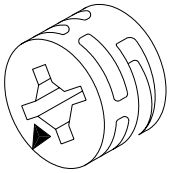

H. Eccentric Cam

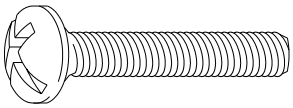

K. Phillips Pan Head Machine Screw

N. Phillips Flat Head Wood Screw

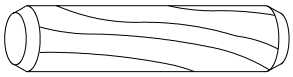

L. Wood Dowel

1859302
Barrister Bookcase

Attach the Back Panel to the Bottom Panel

Parts required

C.	Bottom Panel	1 pc	D.	Back Panel	1 pc

1. **Attach Back Panel (D)** Lay the Bottom Panel (C) on a soft surface with the pre-drilled holes facing up. Insert the exposed dowels of the Back Panel (D) into the pre-drilled holes. See Illustration # 1.

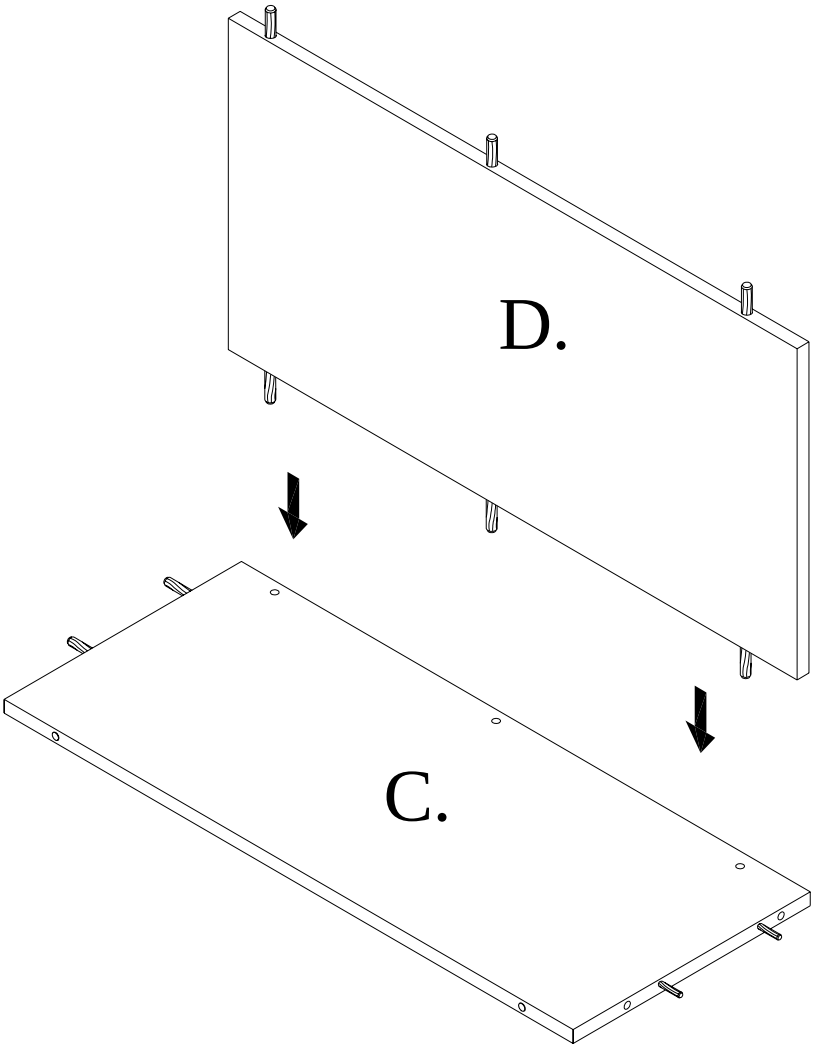

Illustration # 1

1859302
Barrister Bookcase

Assemble the Bookcase

Parts required

A.	Swing Door	1 pc	H.	Eccentric Cams	8 pcs
B.	Side Panels	2 pcs	I.	Allen Head Wrench	1 pc
E.	Front Stretcher	1 pc	J.	Door Pulls	2 pcs
F.	Back Stretcher	1 pc	K.	Phillips Pan Head Machine Screw	2 pcs
G.	Connecting Bolts	8 pcs	O.	Phillips Head Screwdriver	1 pc

2. **Attach Back Stretcher (F) with Side Panel (B)** Screw Connecting Bolts (G) into the pre-drilled holes in upper corners of Side Panel (B). Insert Eccentric Cams (H) into the pre-drilled holes in the top of the Back Stretcher (F). Make sure the "X" is facing out and the arrow points toward the pre-drilled holes in the edge of the Back Stretcher (F). Align the pre-drilled hole in the edge of the Back Stretcher (F) over Connecting Bolt (G) and insert dowel into pre-drilled hole of Side Panel (B). Secure in place by turning the Eccentric Cams (H) in a clockwise direction using the Allen Head Wrench (I). See Illustration # 2.
3. **Attach Side Panel (B) with Bottom Panel (C)** Screw Connecting Bolts (G) into the pre-drilled holes in lower corners of Side Panel (B). Insert the Eccentric Cams (H) into the pre-drilled holes in the Bottom Panel (C). Make sure the "X" is facing out and the arrow points toward the pre-drilled holes in the edge of the Bottom Panel (C). Align the pre-drilled holes in the edge of the Bottom Panel (C) over the Connecting Bolts (G). Secure in place by turning the Eccentric Cams (H) in a clockwise direction using the Allen Head Wrench (I). See Illustration # 2.
4. **Attach Front Stretcher (E)** Repeat step (2) to attach the Front Stretcher (E).
5. **Attach Swing Door (A)** Insert the pin of the Swing Door (A) into the groove of Side Panel (B).
6. **Attach remaining Side Panel (B)** Repeat steps 2 - 5 to attach remaining Side Panel (B).
7. **Attach Door Pulls (J)** Align the pre-threaded holes in the Door Pulls (J) with the pre-drilled holes in the Swing Door (A). Secure from the back of the door with the Phillips Pan Head Machine Screws (K) using the Phillips Head Screwdriver (O). See Illustration # 2.

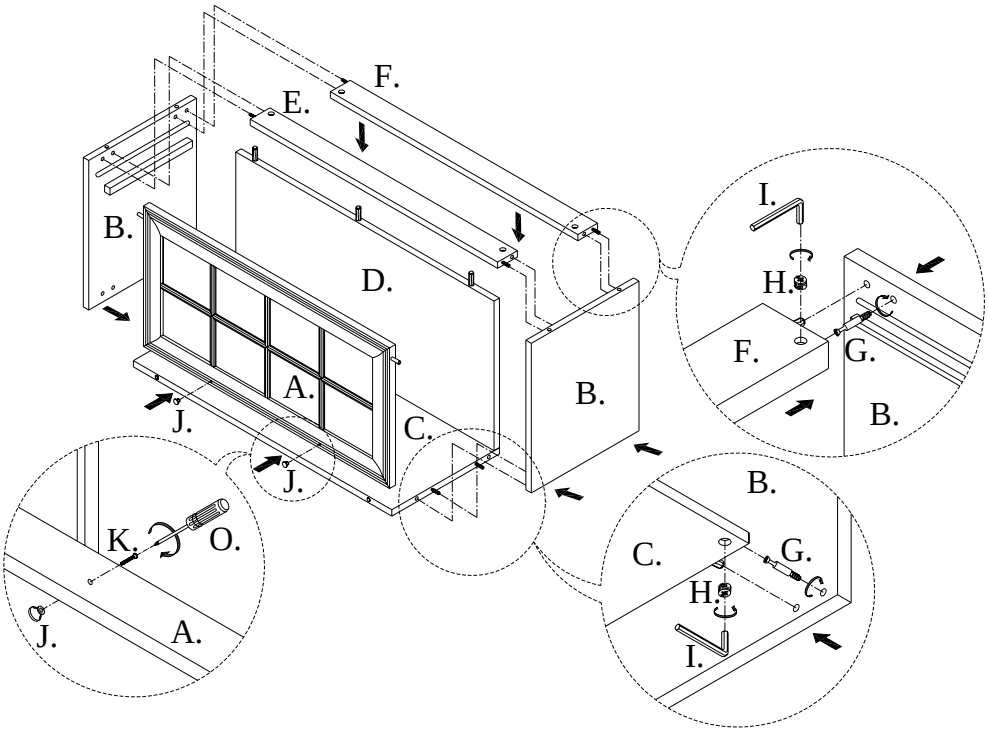

Illustration # 2

1859302
Barrister Bookcase

Attaching Bookcases

Parts required

L.	Wood Dowels	4 pcs	N.	Phillips Flat Head Wood Screw	4 pcs
M	Connecting Plates	2 pcs	O.	Phillips Head Screwdriver	1 pc

8. To attach a bookcase on top of the other, please insert the Wood Dowels (L) into the pre-drilled holes in the top of the Side Panels (B). Then align the pre-drilled holes in the bottom of the second unit over the exposed Wood Dowels (L). Secure in place with the Connecting Plates (M) and the Phillips Flat Head Wood Screws (N) using the Phillips Head Screwdriver (O). See Illustration # 3

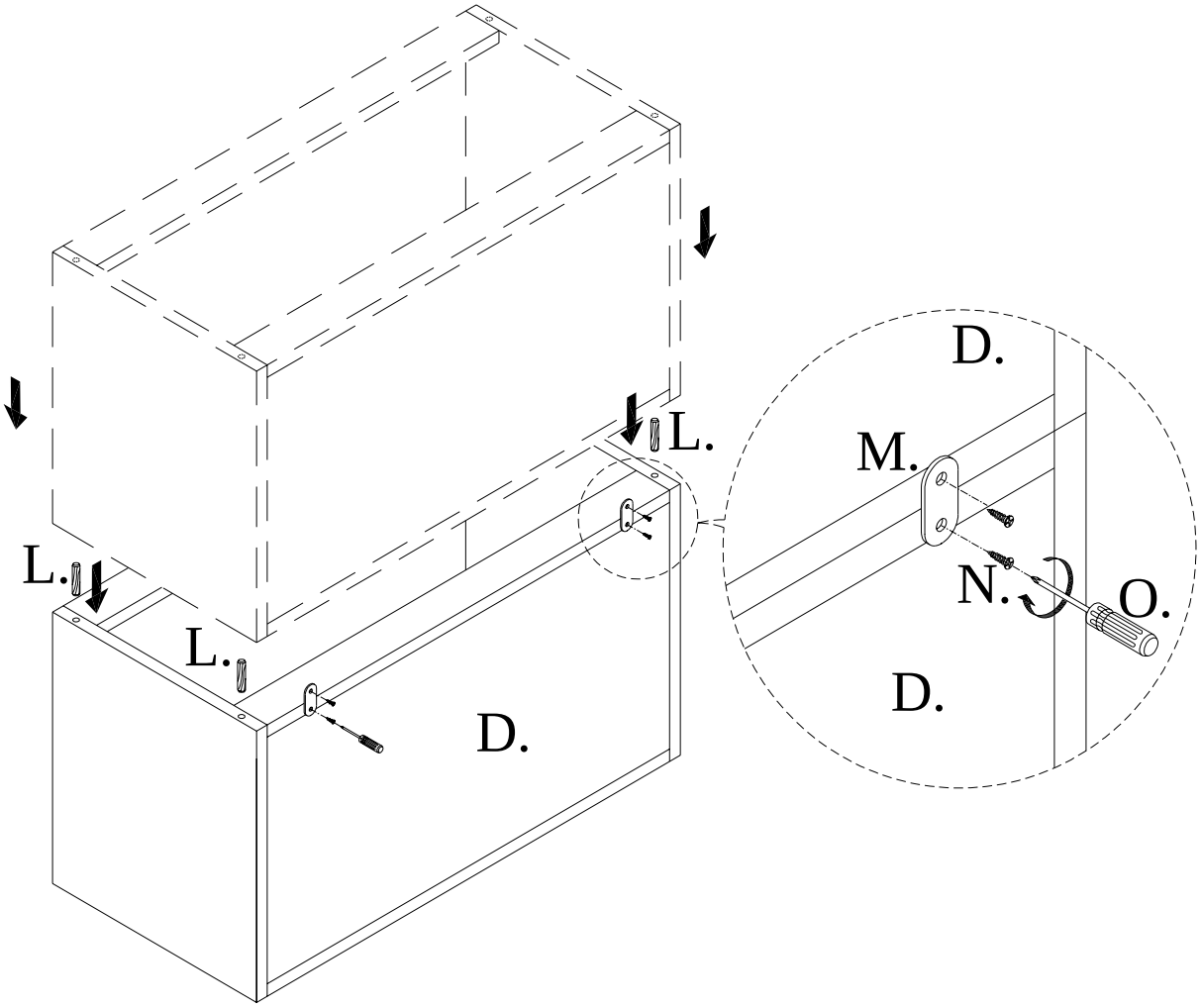

Illustration # 3